LPCET LIBRARY BANGALORE-49

CBCS SCHEME

USN | | | | | | | | | | |

18CIV14/24

First/Second Semester B.E./B.Tech. Degree Examination, June / July 2026

Elements of Civil Engineering and Mechanics

Time: 3 hrs. Max. Marks: 100

Note: Answer any FIVE full questions, choosing ONE full question from each module.

Important Note : 1. On completing your answers, compulsorily draw diagonal cross lines on the remaining blank pages.
2. Any revealing of identification, appeal to evaluator and /or equations written eg, 42+8 = 50, will be treated as malpractice.

Module-1

1 a. Explain the scope of following Civil Engineering fields.
i) Structural Engineering
ii) Geotechnical Engineering **(10 Marks)**

b. What are the effects of infrastructural facilities on socio-economic development of a country? **(10 Marks)**

OR

2 a. Define a Force and explain different classification of force systems with neat sketches. **(10 Marks)**

b. A system of four forces acting at a point on a body is shown in fig Q. 2(b). Determine the resultant magnitude and its direction.

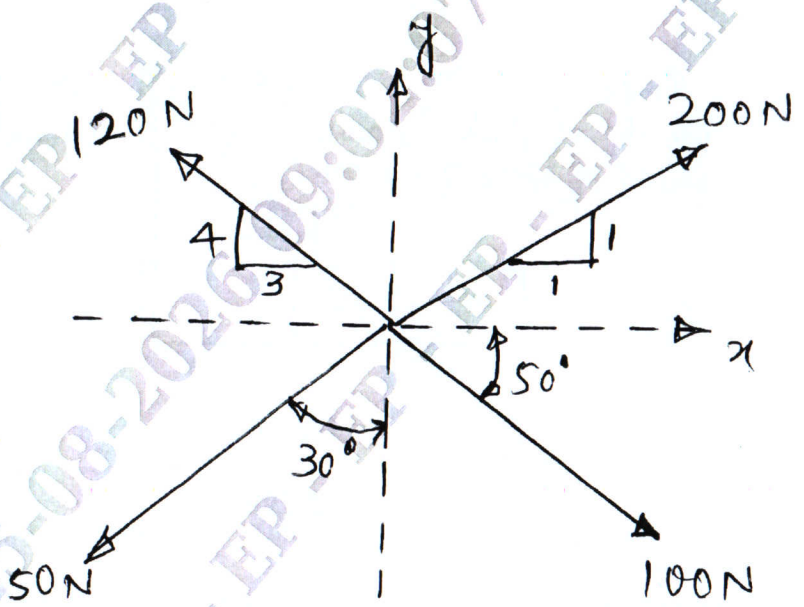

Fig. Q. 2 (b) **(10 Marks)**

VTU-25-08-2026 08:40:22am - EP - EP - EP

Module-2

3 a. State and explain Lami's Theorem. **(08 Marks)**

b. A system of forces acting on a pole as shown in fig. Q. 3 (b). Determine the magnitude, direction, position and y – intercept of the resultant with reference to point 'O'.

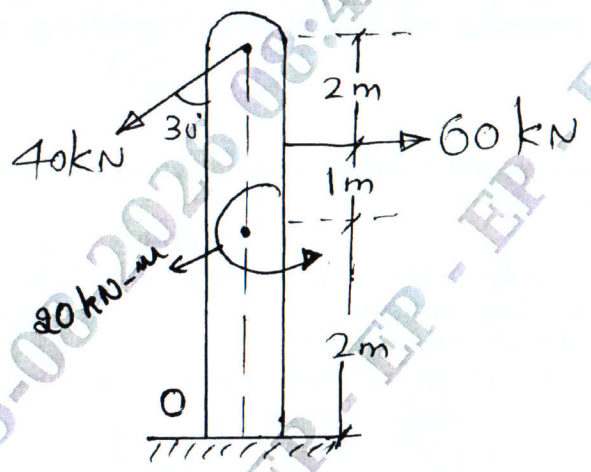

Fig Q. 3 (b) **(12 Marks)**

OR

4 a. Explain types of friction force. **(08 Marks)**

b. Find the force F just required to slide the block Q in arrangement shown in fig. Q 4 (b). Find also tension in cable.

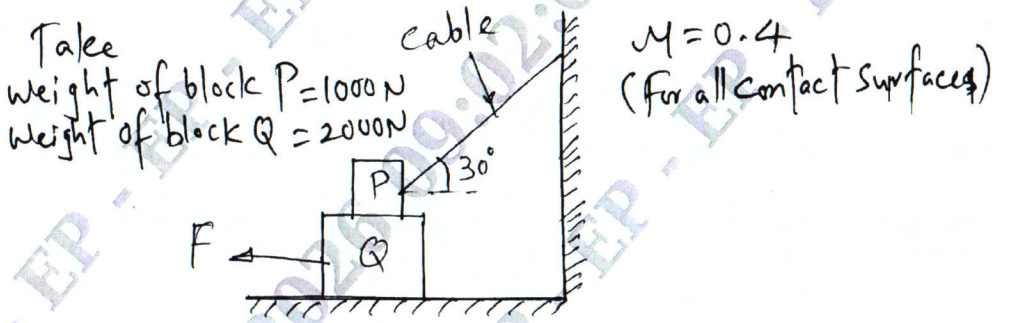

Fig. Q. 4 (b) **(12 Marks)**

Module-3

5 a. Explain the difference between statically determinate and indeterminate beams with an examples. **(08 Marks)**

b. Determine reactions developed at supports A & B of the loaded beam shown in fig. Q. 5 (b).

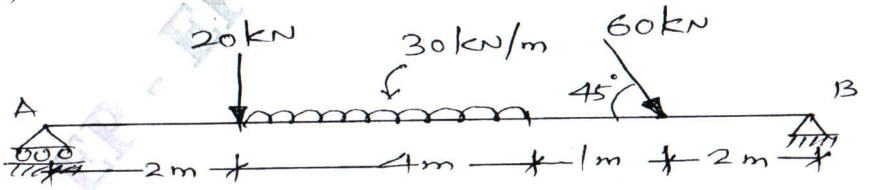

Fig. Q. 5 (b) **(12 Marks)**

OR

6 a. List out assumptions made in the analysis of trusses. **(06 Marks)**

b. Analyze and determine the forces in all the members of the truss shown in fig. Q. 6 (b). Tabulate the results. Use method of joints.

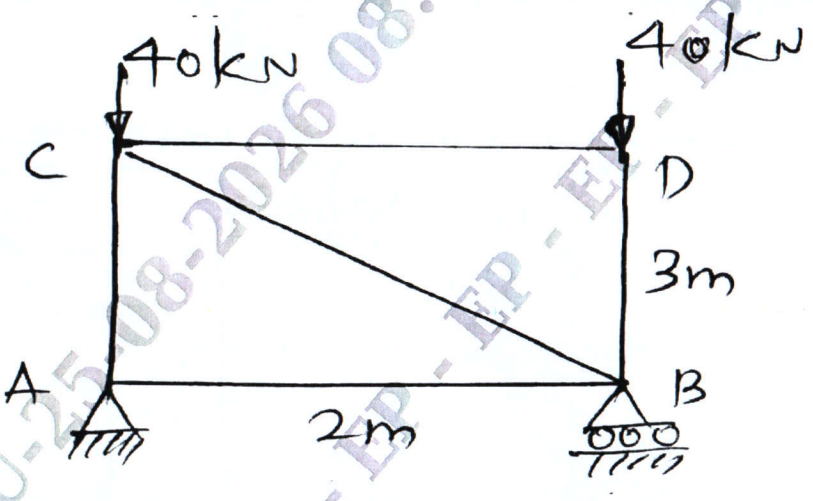

Fig. Q. 6 (b) **(14 Marks)**

Module-4

7 a. Using first principle, determine centroid of a quadrant of a circle of radius 'r'. **(10 Marks)**

b. Find the centroid of the shaded area shown in fig. Q. 7 (b).

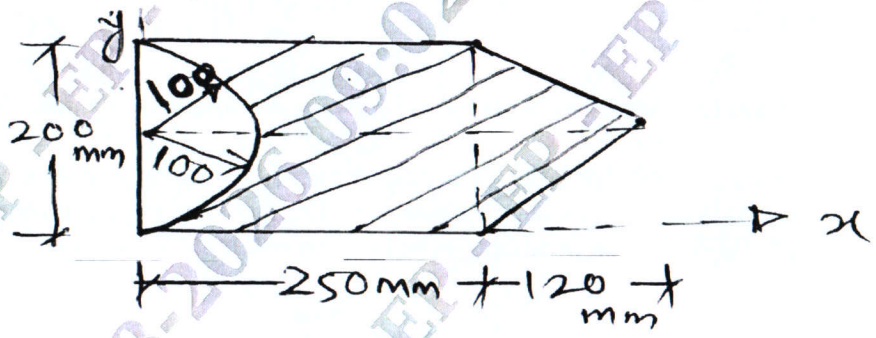

Fig. Q. 7 (b) **(10 Marks)**

OR

8 a. State and prove Parallel Axes Theorem. **(08 Marks)**

b. Determine polar radius of gyration about centroidal axis of the section shown in fig. Q. 8 (b).

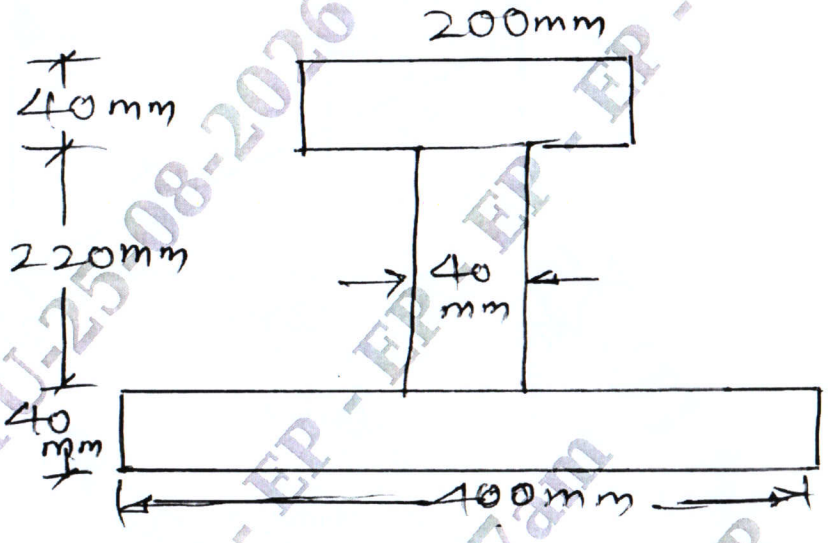

Fig. Q. 8 (b) **(12 Marks)**

Module-5

9 a. Explain Displacement, Average velocity, Speed and Instantaneous Velocity. **(08 Marks)**

b. A Burglar's car starts at an acceleration of 2m/sec^2. A police vigilant party came after 5 seconds and continued to chase the Burglar's car with a uniform velocity of 20 m/sec. Find the time taken in which the police van will overtake the car. **(12 Marks)**

OR

10 a. Derive an equation for the path of a projectile with neat sketch. **(10 Marks)**

b. A cricket ball thrown by a player from a height of 2 m above the horizontal ground at an angle of 30° to the horizontal and with the velocity of 12 m/ sec. The ball hits the wicket at a height of 0.6 m above the ground. How far is the player from the wicket? **(10 Marks)**

* * * * *